EXPERIMENT 2

AIM: Configure logic gates for verification of truth table of logic gates.

Component Table

Component	Quantity
NOT Gate	1
AND Gate	1
OR Gate	1
NAND Gate	1
NOR Gate	1
XOR Gate	1
XNOR Gate	1
Input	1,2
Output	1
LED	1

Definition of Logic Gate

Logic gates are the basic building blocks of digital circuits. They perform logical operations on one or more binary inputs to produce a single binary output. These gates are implemented using electronic switches like diodes, transistors, or integrated circuits. Logic gates are essential for executing arithmetic and logical operations in all digital systems such as computers, microcontrollers, and embedded devices.

Types of Logic Gates:

1. AND
2. OR
3. NOT
4. NAND
5. NOR
6. XOR
7. XNOR

1.AND GATE

a)Definition and working

An AND gate is a digital circuit that implements the logical conjunction of its inputs. It provides an output of 1 only when all its inputs are 1. It is used in digital systems where multiple conditions must be satisfied simultaneously.

The AND gate checks if all conditions are true (HIGH). If any input is 0 (LOW), the result will automatically be 0, regardless of the other inputs. For example, in a security system, if both the door is closed (input 1) and the lock is engaged (input 1), only then the system will activate (output 1). This gate is widely used in arithmetic logic units, processors, and control logic.

b)Logisim Circuit.

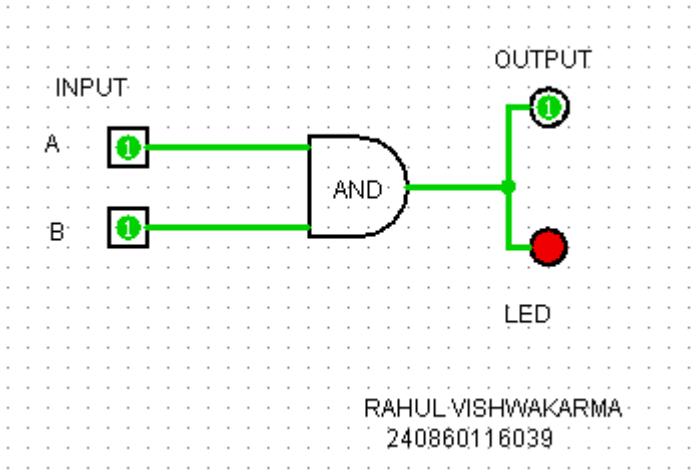

Equation: **Y=A.B**

Truth table:

INPUT		OUTPUT
A	B	Y=A.B
0	0	0
0	1	0
1	0	0
1	1	1

2.OR GATE

Definition and Working

An OR gate is a fundamental digital circuit that performs the logical addition operation. It produces a HIGH (1) output if at least one of its inputs is HIGH.

This gate outputs 1 when **any one or more** of its inputs is 1. It is often used in alarm or warning systems where a response is needed if any one of several inputs is active. For example, if **either** smoke is detected or heat crosses the threshold, the fire alarm (output) will activate. It provides a flexible decision-making mechanism in digital circuits.

b)Logisim Circuit

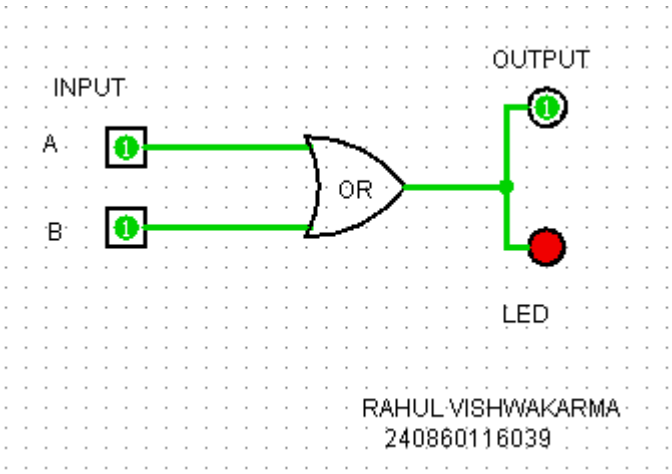

Equation: **Y=A+B**

Truth Table:

INPUT		OUTPUT
A	B	Y=A+B
0	0	0
0	1	1
1	0	1
1	1	1

3. NOT GATE

a)Definition and working

A NOT gate, also known as an inverter, is a single-input digital gate that outputs the logical complement of the input. It flips the binary state.

The NOT gate has only one input and one output. It reverses the signal — if the input is 1, the output becomes 0, and vice versa. This gate is essential for creating complement circuits, generating control logic, and is widely used in memory, register design, and CPU control units.

b)Logisim Circuit

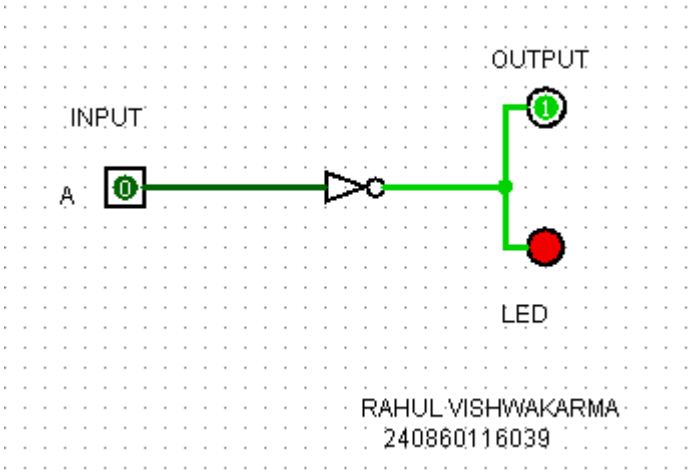

Equation: **Y=A'**
Truth table:

INPUT	OUTPUT
A	Y=A'
0	1
1	0

4.NAND GATE

a)Definition and Working

A NAND gate is a universal gate formed by combining an AND gate followed by a NOT gate. It performs the negated output of the AND logic.Logisim Circuit.

This gate outputs 0 only when all inputs are 1; in all other cases, it outputs 1. It is called a "universal gate" because any logic circuit (AND, OR, NOT) can be built using only NAND gates. For instance, in processor design and embedded systems, NAND gates are used to build complex logic functions due to their versatility and lower fabrication cost.

b)Logisim Circuit

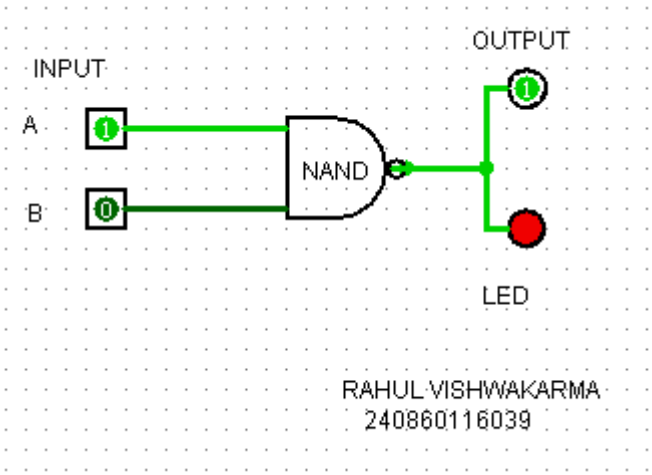

Equation: **Y=(A.B)'**

Truth table:

INPUT		OUTPUT
A	B	Y=(A.B)'
0	0	1
0	1	1
1	0	1
1	1	0

5.NOR GATE

a)Definition and Working

The NOR gate is a universal digital gate that outputs 1 only when all inputs are 0. It is a combination of the OR gate followed by a NOT gate.

When any input becomes 1, the output switches to 0. It's widely used in control systems, timing circuits, and microprocessor designs. The NOR gate is also universal, meaning any Boolean function can be constructed using only NOR gates. For instance, in control panels, if any one condition becomes active (input 1), the process stops (output 0).

b)Logisim Circuit

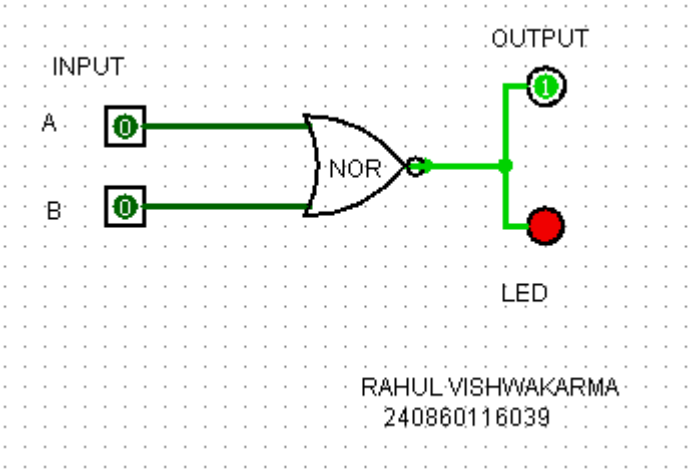

Equation: **Y=(A+B)'**

Truth table:

INPUT		OUTPUT
A	B	Y=(A+B)'
0	0	1
0	1	0
1	0	0
1	1	0

6.XOR GATE(Exclusive OR)

a)Definition and Working

An XOR gate is a digital logic gate that outputs 1 when the number of HIGH inputs is odd. It's known for detecting **inequality** between inputs.

In a two-input XOR gate, output is HIGH only if inputs are different. It plays a major role in arithmetic circuits such as adders and parity checkers. For example, in a half adder circuit, the XOR gate is used to calculate the sum bit. It is also used in cryptography and data comparison logic, where mismatches need to be detected.

b)Logisim Circuit

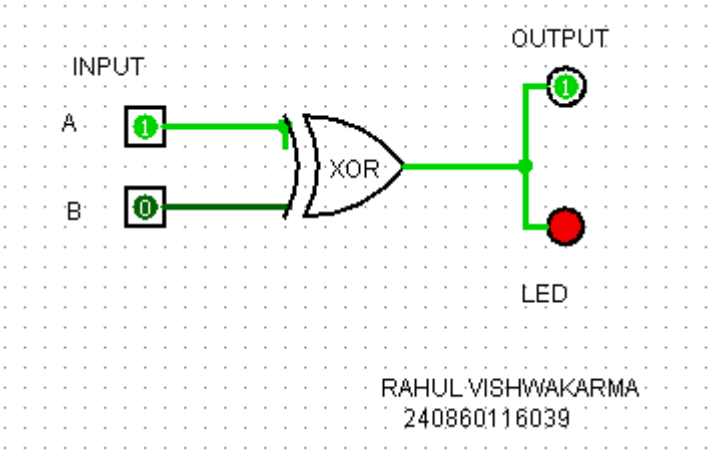

Equation: **Y=AB'+A'B**
Truth table:

INPUT		OUTPUT
A	B	Y=AB'+A'B
0	0	0
0	1	1
1	0	1
1	1	0

7.XNOR GATE(Exclusive NOR)

a)Definition and Working

An XNOR gate is the logical complement of XOR. It gives a HIGH output when the number of HIGH inputs is even — usually when both inputs are the same

If both inputs are 0 or both are 1, the output is 1. It is useful for detecting equality. In digital comparators, this gate helps identify when two binary numbers are identical. XNOR gates are also applied in error detection circuits, data matching, and security systems where consistency of input data is necessary.

b)Logisim Circuit

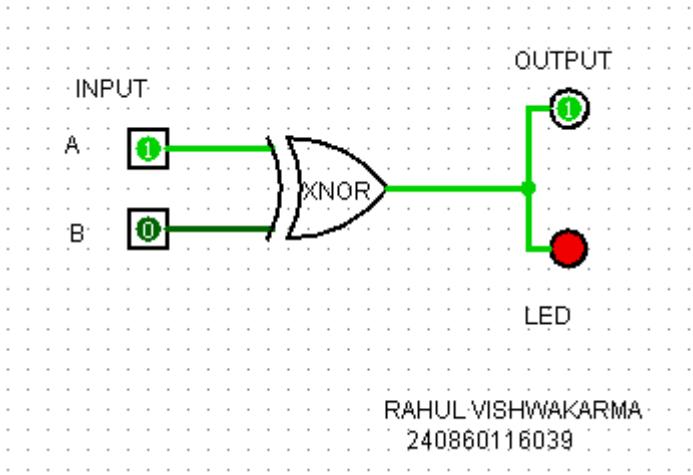

Equation: **Y=A'B'+AB**
Truth table:

INPUT		OUTPUT
A	B	Y=A'B'+AB
0	0	1
0	1	1
1	0	1
1	1	0

Conclusion:

This practical demonstrated how basic logic gates operate through truth tables and simulation in Logisim. Understanding these gates is fundamental in digital circuit design, and their behavior was verified successfully through practical implementation.